View from Top side (Scale 2:3)

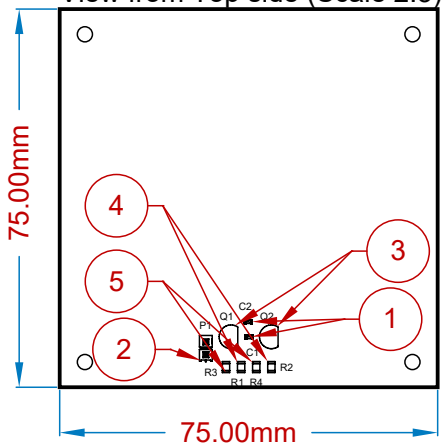


Top Layer (Scale 2:3)

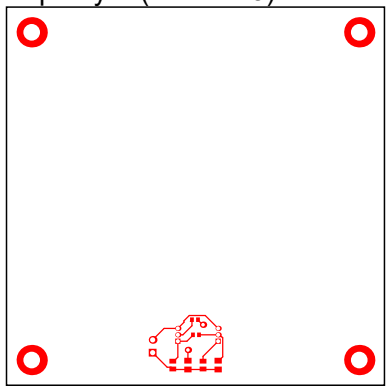

Bottom Layer (Scale 2:3)

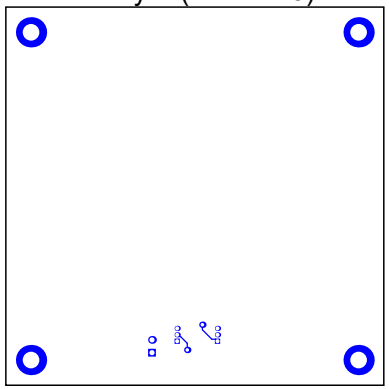

View from Front side (Scale 2:3)

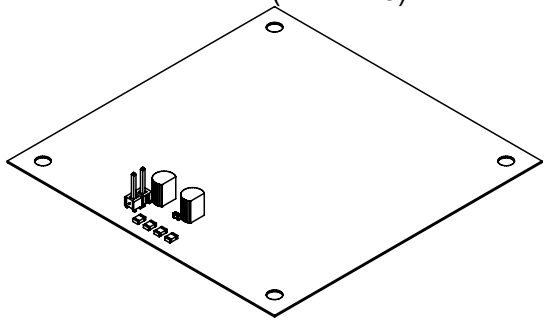

View from Back side (Scale 2:3)

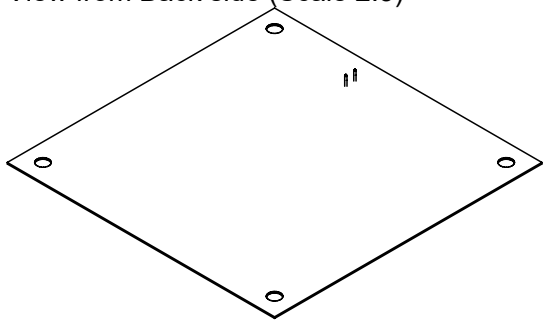

Layer Stack Legend

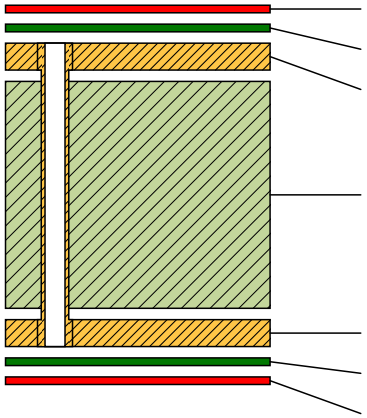

| Material | Layer | Thickness | Dielectric Material | Type | Gerber |
|---|---|---|---|---|---|
| | Top Overlay | | | Legend | GTO |
| Surface Material | Top Solder | 0.01mm | Solder Resist | Solder Mask | GTS |
| **Copper** | **Top Layer** | **0.04mm** | | **Signal** | **GTL** |
| | | *0.32mm* | *FR-4* | *Dielectric* | |
| **Copper** | **Bottom Layer** | **0.04mm** | | **Signal** | **GBL** |
| Surface Material | Bottom Solder | 0.01mm | Solder Resist | Solder Mask | GBS |
| | Bottom Overlay | | | Legend | GBO |

Total thickness: 0.41mm

Bill Of Materials

| Line # | Designator | Name | Quantity |
|---|---|---|---|
| 1 | C1, C2 | C0603C223J4RACTU | 2 |
| 2 | P1 | TSW-102-26-F-S | 1 |
| 3 | Q1, Q2 | BC547CG | 2 |
| 4 | R1, R2 | ERJ-6GEYJ104V | 2 |
| 5 | R3, R4 | ERJ-P06J102V | 2 |

AGH
Akademia Górniczo-Hutnicza im. Stanisława Staszica w Krakowie

Company Confidenrial / Not for distribution!

Project name: Multivibrator.PrjPcb

Document Name: Multivibrator.PCBDwf

Designer Name: Michał Wojna  Date / Time: 04.04.2026 13:42  Revision:

# Bill of Materials

Altium
2175 Salk Avenue
Suite 200
Carlsbad, CA 92008
USA

Project Title: Bill of Materials for BOM Document [Multivibrator.BomDoc]
Project File Name: Multivibrator.PrjPcb
Assembly Variant: None

| Part Number | Description | Designator | Manufacture | Manufacture Part Number | Supplier | Supplier Part Number | Supplier Unit Price | Quantity |
|---|---|---|---|---|---|---|---|---|
| CMP-2006-03745-1 | CAP CER 0.022UF 16V 5% X7R 0603 | C1, C2 | Yageo Group | C0603C223J4RACTU | Arrow Electronics | C0603C223J4RACTU | $0,04 | 2 |
| CMP-1024-00329-1 | 0.025" SQ Post Header, Through-hole, Vertical, -55 to 125 degC, 2.54 mm Pitch, 2-Pin, Male, RoHS | P1 | Samtec | TSW-102-26-F-S | DigiKey | SAM15358-ND | $0,30 | 1 |
| CMP-1048-01464-1 | Amplifier Transistor, NPN Silicon, 3-Pin TO-92, Pb-Free, Bulk Box | Q1, Q2 | onsemi | BC547CG | Arrow Electronics | BC547CG | $0,21 | 2 |
| CMP-2001-00338-1 | | R1, R2 | Panasonic | ERJ-6GEYJ104V | Newark | ERJ6GEYJ104V | $0,10 | 2 |
| CMP-2001-00477-1 | | R3, R4 | Panasonic | ERJ-P06J102V | | | | 2 |
| | | | | | | | $0,65 | 9 |

| Approved | Notes |
|---|---|
| | |

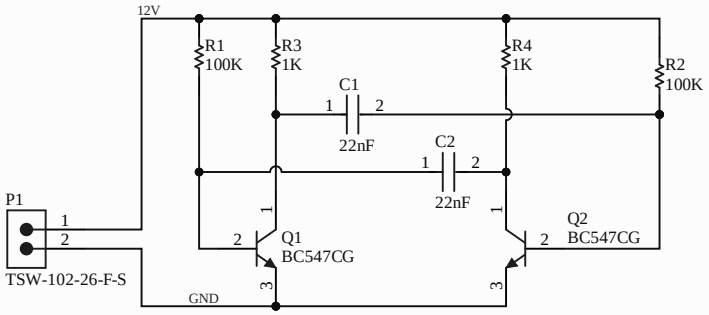


| | |
|---|---|
| AGH Akademia Górniczo-Hutnicza im. Stanisława Staszica w Krakowie | **Company Confidenrial / Not for distribution!** |
| | **Project name:** Multivibrator.PrjPcb |
| | **Document Name:** Multivibrator.SchDoc |
| | **Designer Name:** Michał Wojna **Date / Time:** 04.04.2026 13:42:20 **Revision:** 1 |